Specification

Model	CM3□–05	CM3□–06	CM3□–08
Operating	External control		
Fluid	Air (to be filtered by 40 μ m filter element)		
Pressure range	0~1.0MPa(0~114psi)(0~10.0bar)		
Proof pressure	1.5MPa(215psi)(15.0bar)		
Temperature	–20~70 ℃		
Valve type①	3 port 2 position		
Orifice size	2.0mm²	2.5 mm²	15.0mm²
Lubrication	0.11	0.14	0.84
Port size②	M5x0.8	1/8"	1/4"
Material body	Aluminum alloy		

① HD series are 5/3 way. ② PT thread, NPT thread and G thread are available.

CM3

Symbol

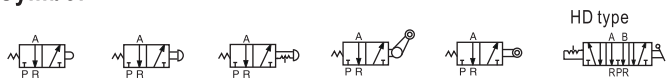

Product feature

1. The external force required by changing the direction of the series of CM3B, CM3V, CM3L and CM3R is provided by external mechanism, which can be used for position test or limit switch.
2. The series of CM3PF, CM3PM, CM3PMS, CM3PMX, CM3PL, CM3PP, CM3HS, CM3HD and CM3Y are operated manually, owning control joints with several structure forms and suitable for application under different conditions.
3. Shut-off structure has good tightness and is sensitive in direction changing and lubricant is not necessary.
4. Multi-mounting makes it convenient to install and apply.
5. The control joints of series of CM3L, CM3V, CM3R and CM3Y are made of metal which has long service life and more reliable and steady performance.
6. CM3PMS. CM3PMX Series have metallic guard, it can protect the push cup, to avoid misact due to outside force touching the push cup. So they can be used more reliably.

Flow chart

Model：CM3B–05

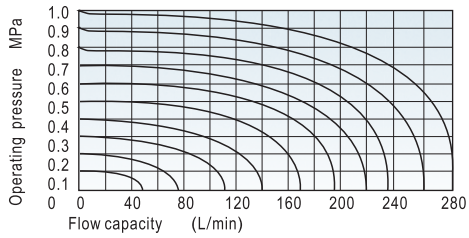

Model：CM3B–06

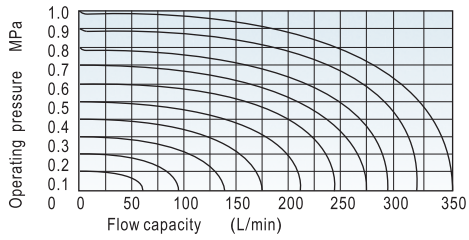

Model：CM3B–08

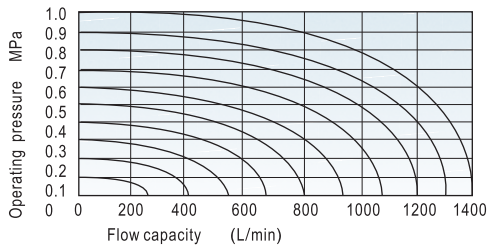

Ordering code

CM3 PP 06 B □

Valve's type

CM3: CM type 3/2 5/3 way

Model

B: Basic type
R: Roller type
L: Roller with free return type
V: Vertical type
Y: Lever typer
PL: Latching type
PP: Protruding type
PF: Flat type
PM: Mushroom type
PMS: Mushroom type(with guard)
PMX: Big mushroom type(with guard)
HS: Selector type
HD: Double-selector type

Port size

05: M5
06: 1/8"
08: 1/4"

Button color

Model	Button color
B,R,L,V,Y	Not code
PL	R: Red
PP,PF,PM PMS,PMX HS,HD	R: Red
	G: Green
	B: Black
	Y: Yellow

Thread type

Port size	Thread type
M5	Not code
1/8" 1/4"	Blank: PT
	T: NPT
	G: G

CM3

Installation and operation

1. Mounting way: by body, by panel I, by panel II, latching type, mushroom type. Please refer to the following picture:

Fixation way of body

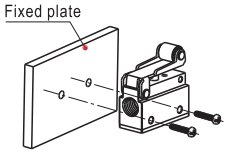

Fixation way of panel Ⅰ

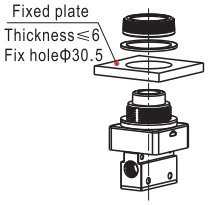

Fixation way of panel Ⅱ

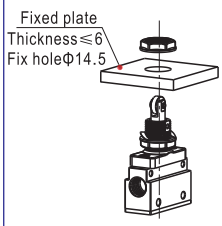

Latching type

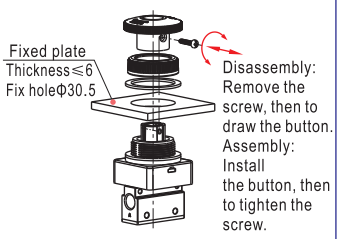

Mushroom type

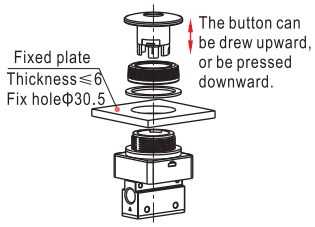

Big mushroom type(With guard)

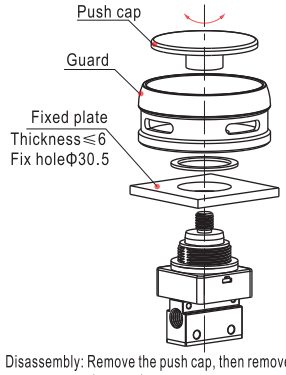

Disassembly: Remove the push cap, then remove the guard.
Assembly: Install the guard, then to tighten the push cap.

Mushroom type(With guard)

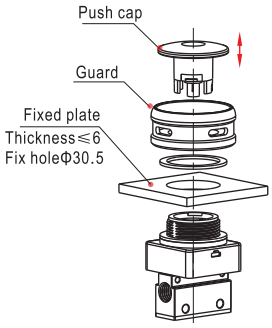

Disassembly: Untighten the guard first, then remove the push cap with the guard.
Assembly: Install the guard, then to tighten the push cap.

2. The control set is made of engineering plastic which only allows manual operation and switching valves through metal impact is forbidden.
3. The series of CM3B, CM3L, CM3V, CM3R, CM3PM, CM3PMS, CM3PMX, CM3PF, CM3PP get the function of automatic restoration. The hand valves of CM3Y, CM3HS, CM3HD, CM3PL are in type of manual restoration. CM3PL will be restored by turning the revolve button after being pressed into orientation.
4. Pay attention to the reversing stroke. The reversing stroke can not surpass its stroke stipulated in stroke control table when the direction-change of the valve is forced by any external forces, otherwise it will cause the damage of the valve.

Type	Spool stroke	Button (Roller\ Handle) stroke	Type	Spool stroke	Button (Roller\ Handle) stroke
CM3B05(06)	1.5~3.0	-	CM3B08	2.4~4.0	–
CM3R05(06)	1.5~2.5	3.0~4.8	CM3R08	2.4~3.2	6.8~9.0
CM3L05(06)	1.5~2.3	3.0~4.8	CM3L08	2.4~3.2	7.2~9.7
CM3V05(06)	1.5~3.0	2.7~4.2	CM3V08	2.4~4.0	2.6~4.2
CM3Y05(06)	1.5~2.5	3.0~4.8	CM3Y08	2.4~3.2	6.8~9.0
CM3PL05(06)	1.5~2.5	4.0~5.0	CM3PL08	2.4~3.5	4.0~5.0
CM3PP05(06)	1.5~3.0	4.0~5.5	CM3PP08	2.4~4.0	4.0~5.5
CM3PF05(06)	1.5~3.0	4.0~5.5	CM3PF08	2.4~4.0	4.0~5.5
CM3HS05(06)	1.5~3.0	4.0~5.5	CM3HS08	2.4~4.0	4.0~5.5
CM3HD05(06)	1.5~3.0	4.0~5.5	CM3HD08	2.4~4.0	4.0~5.5
CM3PM05(06)	1.5~3.0	4.0~5.5	CM3PM08	2.4~4.0	4.0~5.5
CM3PMS05(06)	1.5~3.0	4.0~5.5	CM3PMX08	2.4~4.0	4.0~5.5
CM3PMX05(06)	1.5~3.0	4.0~5.5	CM3PMX08	2.4~4.0	4.0~5.5

5. The CM3L can only switch the valve in single direction(impact from left to right). The impact from the other direction (from right to left) is invalid .
6. Control joint combination can be ordered individually. Please refer to external specification.

Inner structure

CM3V

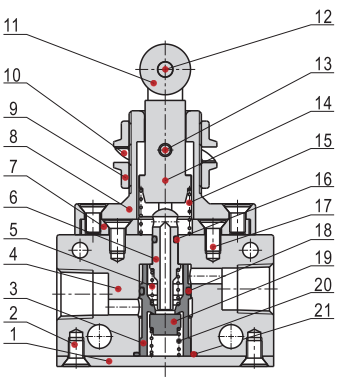

No.	Item	No.	Item
1	Fixing plate	12	Shaft
2	Screw	13	Lock pin
3	Spacer	14	Roller bracket
4	Body	15	Spring
5	Spring	16	O-ring
6	Spool	17	Screw
7	Connerting gasket	18	O-ring
8	connecting holder	19	Bottom cover gasket
9	Clamping nut	20	Spring
10	Spring gasket	21	O-ring
11	Roller		

Dimension (Basic type)

CM3B05

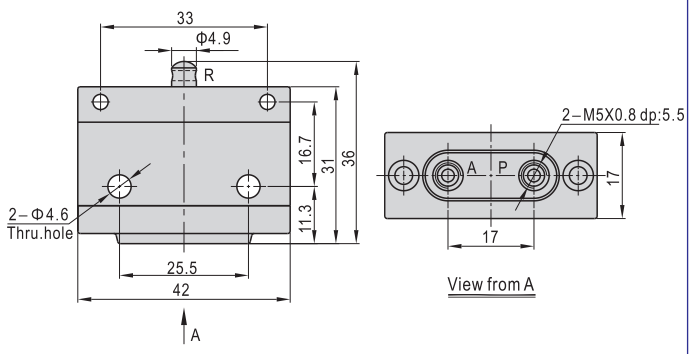

CM3B06

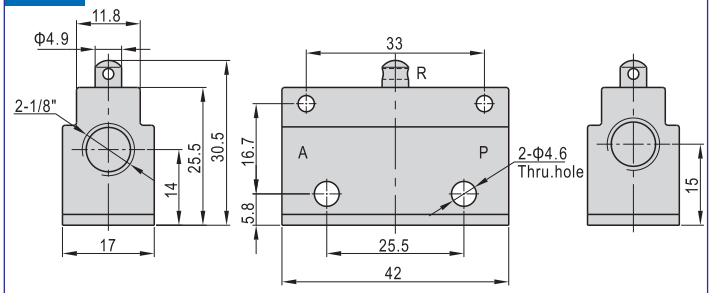

CM3B08

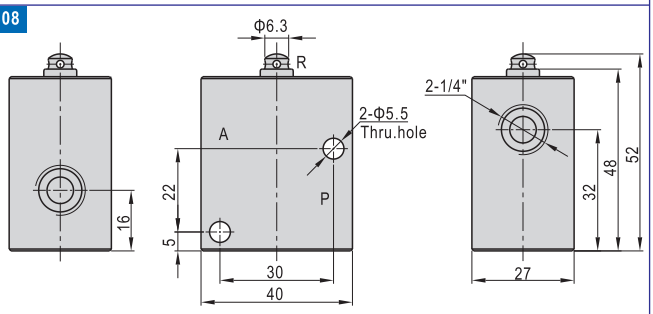

Control set dimension

CM3R06-P1

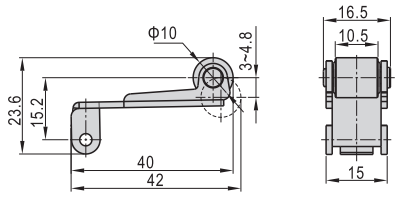

Note: CM3R06 control joint, which used in CM3R05 and CM3R06, can not be ordered individually. It should be matched with basic type.

CM3L06-P1

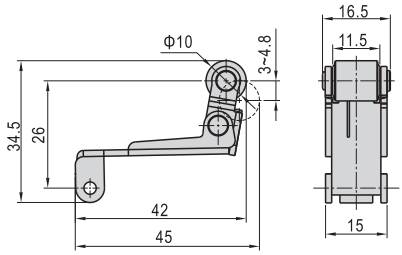

Note: CM3L06 control joint, which used in CM3L05 and CM3L06, can not be ordered individually. It should be matched with basic type.

CM3R08-P1

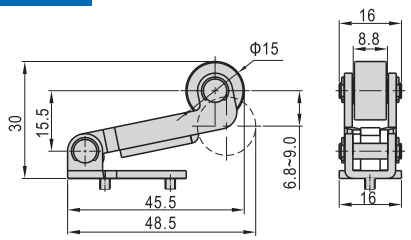

Ordering code	CM3R08-P1
Type	CM3R08 roller type control set
Applicable products	CM3R08

CM3L08-P1

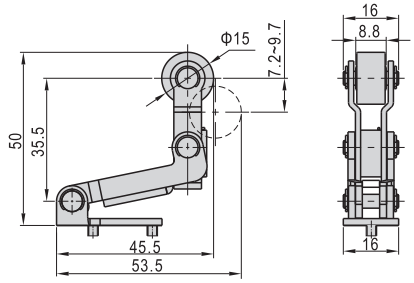

Ordering code	CM3L08-P1
Type	CM3L08 roller type control set
Applicable products	CM3L08

CM3V06-P1

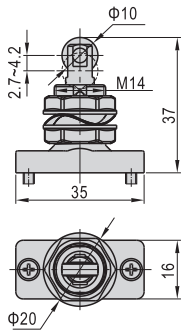

Ordering code	CM3V06-P1
Type	CM3V vertical type control set
Applicable products	CM3V05 CM3V06 CM3V08

CM3Y06-P1

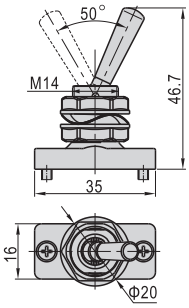

Ordering code	CM3Y06-P1
Type	CM3Y lever type control set
Applicable products	CM3Y05 CM3Y06 CM3Y08

CM3PL06-P2

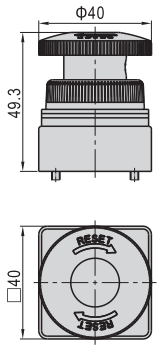

Ordering	CM3PL06-P2
Type	CM3PL latching type control set(red)
Applicable products	CM3PL05 CM3PL06 CM3PL08

CM3PP06-P□

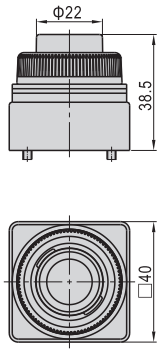

Ordering code	CM3PP06-P1
Type	CM3PP protruding type control set(green)
Applicable products	CM3PP05 CM3PP06 CM3PP08
Ordering code	CM3PP06-P2
Type	CM3PP protruding type control set(red)
Applicable products	CM3PP05 CM3PP06 CM3PP08
Ordering code	CM3PP06-P3
Type	CM3PP protruding type control set(black)
Applicable products	CM3PP05 CM3PP06 CM3PP08
Ordering code	CM3PP06-P4
Type	CM3PP protruding type control set(yellow)
Applicable products	CM3PP05 CM3PP06 CM3PP08

CM3PF06-P□

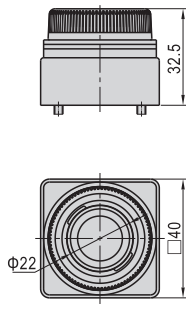

Ordering code	CM3PF06-P1
Type	CM3PF flat type control set(green)
Applicable products	CM3PF05 CM3PF06 CM3PF08
Ordering code	CM3PF06-P2
Type	CM3PF flat type control set(red)
Applicable products	CM3PF05 CM3PF06 CM3PF08
Ordering code	CM3PF06-P3
Type	CM3PF flat type control set(black)
Applicable products	CM3PF05 CM3PF06 CM3PF08
Ordering code	CM3PF06-P4
Type	CM3PF flat type control set(yellow)
Applicable products	CM3PF05 CM3PF06 CM3PF08

CM3

CM3PM06-P□

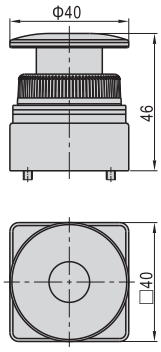

Ordering code	CM3PM06-P1
Type	CM3PM mushroom type control set(green)
Applicable products	CM3PM05 CM3PM06 CM3PM08
Ordering code	CM3PM06-P2
Type	CM3PM mushroom type control set(red)
Applicable products	CM3PM05 CM3PM06 CM3PM08
Ordering code	CM3PM06-P3
Type	CM3PM mushroom type control set(black)
Applicable products	CM3PM05 CM3PM06 CM3PM08
Ordering code	CM3PM06-P4
Type	CM3PM mushroom type control set(yellow)
Applicable products	CM3PM05 CM3PM06 CM3PM08

CM3HS06-P□

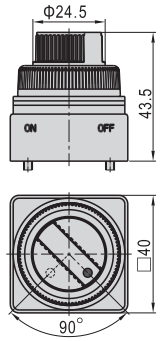

Ordering code	CM3HS06-P1
Type	CM3HS selector type control set(green)
Applicable products	CM3HS05 CM3HS06 CM3HS08
Ordering code	CM3HS06-P2
Type	CM3HS selector type control set(red)
Applicable products	CM3HS05 CM3HS06 CM3HS08
Ordering code	CM3HS06-P3
Type	CM3HS selector type control set(black)
Applicable products	CM3HS05 CM3HS06 CM3HS08
Ordering code	CM3HS06-P4
Type	CM3HS selector type control set(yellow)
Applicable products	CM3HS05 CM3HS06 CM3HS08

CM3PMX06-P□

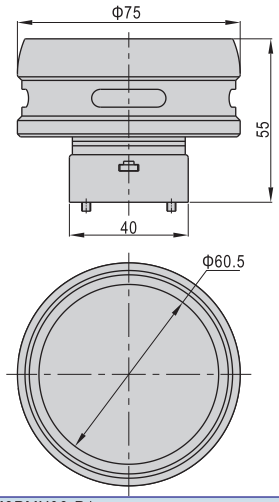

Ordering code	CM3PMX06-P1
Type	CM3PMX big mushroom type control set(green with guard)
Applicable products	CM3PMX05 CM3PMX06 CM3PMX08
Ordering code	CM3PMX06-P2
Type	CM3PMX big mushroom type control set(red with guard)
Applicable products	CM3PMX05 CM3PMX06 CM3PMX08
Ordering code	CM3PMX06-P3
Type	CM3PMX big mushroom type control set(black with guard)
Applicable products	CM3PMX05 CM3PMX06 CM3PMX08
Ordering code	CM3PMX06-P4
Type	CM3PMX big mushroom type control set(yellow with guard)
Applicable products	CM3PMX05 CM3PMX06 CM3PMX08

CM3PMS06-P□

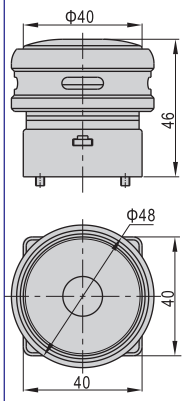

Ordering code	CM3PMS06-P1
Type	CM3PMS mushroom type control set(green with guard)
Applicable products	CM3PMS05 CM3PMS06 CM3PMS08
Ordering code	CM3PMS06-P2
Type	CM3PMS mushroom type control set(red with guard)
Applicable products	CM3PMS05 CM3PMS06 CM3PMS08
Ordering code	CM3PMS06-P3
Type	CM3PMS mushroom type control set(black with guard)
Applicable products	CM3PMS05 CM3PMS06 CM3PMS08
Ordering code	CM3PMS06-P4
Type	CM3PMS mushroom type control set(yellow with guard)
Applicable products	CM3PMS05 CM3PMS06 CM3PMS08

CM3HD06-P□

CM3HD05 type

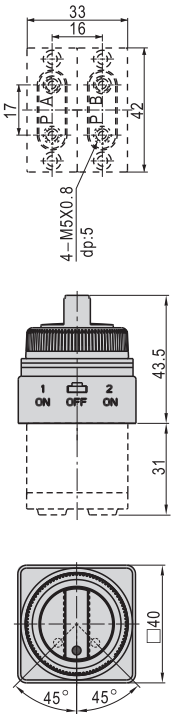

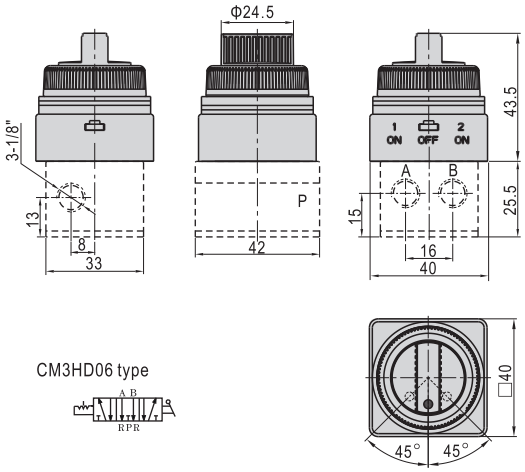

CM3HD06 type

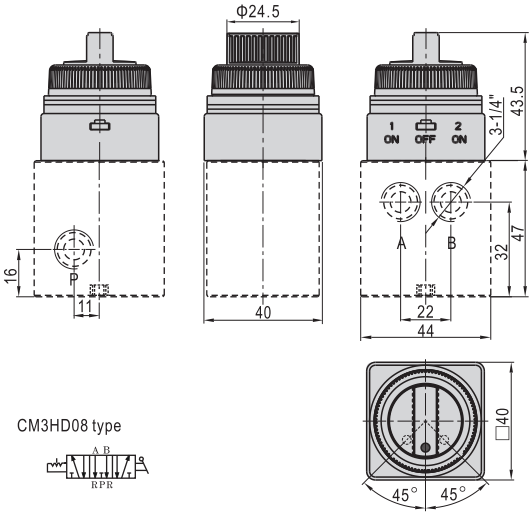

CM3HD08 type

Ordering code	CM3HD06-P1
Type	CM3HD double-selector type control set(green)
Applicable products	CM3HD05 CM3HD06 CM3HD08
Ordering code	CM3HD06-P2
Type	CM3HD double-selector type control set(red)
Applicable products	CM3HD05 CM3HD06 CM3HD08
Ordering code	CM3HD06-P3
Type	CM3HD double-selector type control set(black)
Applicable products	CM3HD05 CM3HD06 CM3HD08
Ordering code	CM3HD06-P4
Type	CM3HD double-selector type control set(yellow)
Applicable products	CM3HD05 CM3HD06 CM3HD08

Note: CM3HD control joint can be ordered individually, but should be matched with the body of CM3HD.